Name:Brushless Axial Motor Fan
Model：AX12BL009C-B305-VSP-03(P/N:01.12.06)
Supplier:Chongqing Tonada Technology Co.,Ltd

Specification：
1.0 Specific Application：Bus Air Conditioning System；
2.0 Type：Brushless DC Motor,Permanent Magent;
3.0 Protection:
3.1 Motor Insulation:Class H;
3.2 Protection:IP68
4.0 Material:
4.1 305 Nine Leaves hair leaves and 305 nets：PA66+GF30；
4.2 Motor:ZL104;Aluminium Alloy
4.3 Motor Shaft：40Cr；Steel
4.4 Motor Bearing：NSK；
4.5 Degree Burn：UL94 V0；
5.0 Environment:
5.1 Operaing Temperture:-40~85°C
5.2 Humidity:0~100%;
5.3 Operating Life:25,000 Hours Minimum;
5.4 Vibration:20ms,5G;
5.5 Axial movement:0.25mm Maximum;
6.0 Electrical Characteristics:
6.1 Rated Voltage:+12 DV;
6.2 Voltage Range:+8~+16V DC;
6.3 Current Input:See Chart,under different static pressure;
6.4 Description of the input leads：
6.4.1 5 Wires input;
6.4.2 Lead length：600±10mm；A black φ8 PVC tube length：450mm；
6.4.3 Power Line Model：QVR 105℃ or Wire approved automotive engineering
6.4.4 30A Insurance in controller
7.0 Weight Approx:3.0 Kg

BLDC Axial Blowers Performance Parameters Test Voltage:13.5V			
Static Pressure（Pa）	Airflow（m^3/h）	Speed（RPM）	Current Input（A）
0	2660	2500	16.0
50	2415	2465	16.4
100	2115	2420	16.8
150	1580	2420	17.2
200	1125	2410	17.4
250	670	2390	17.6
300	230	2380	18.8

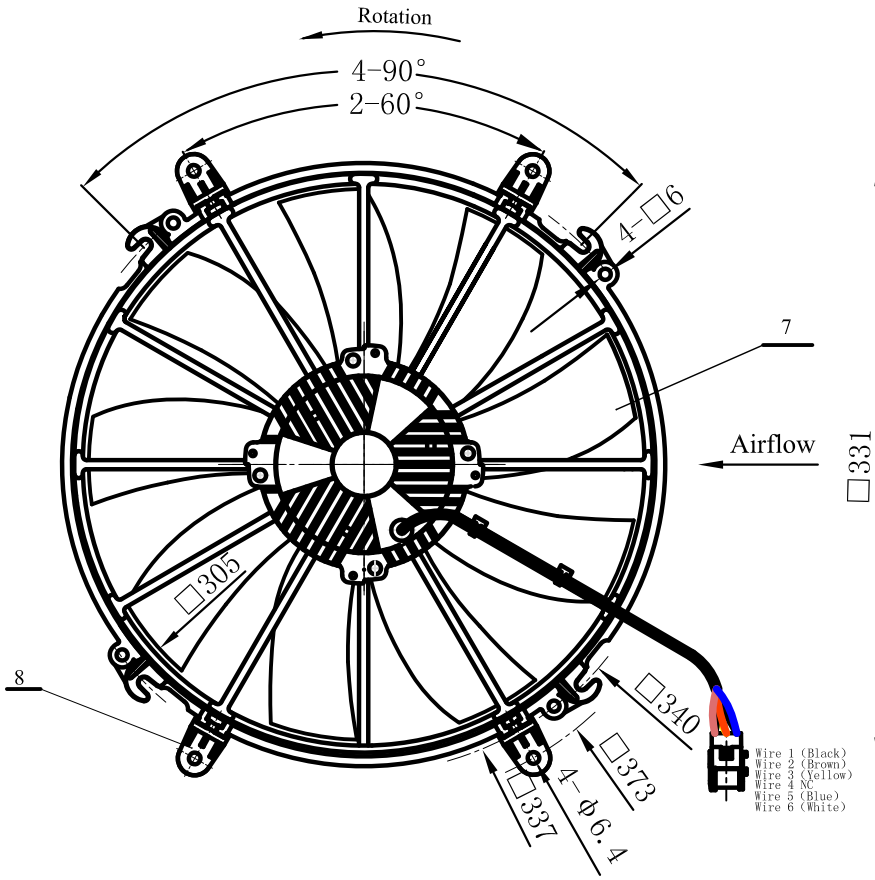

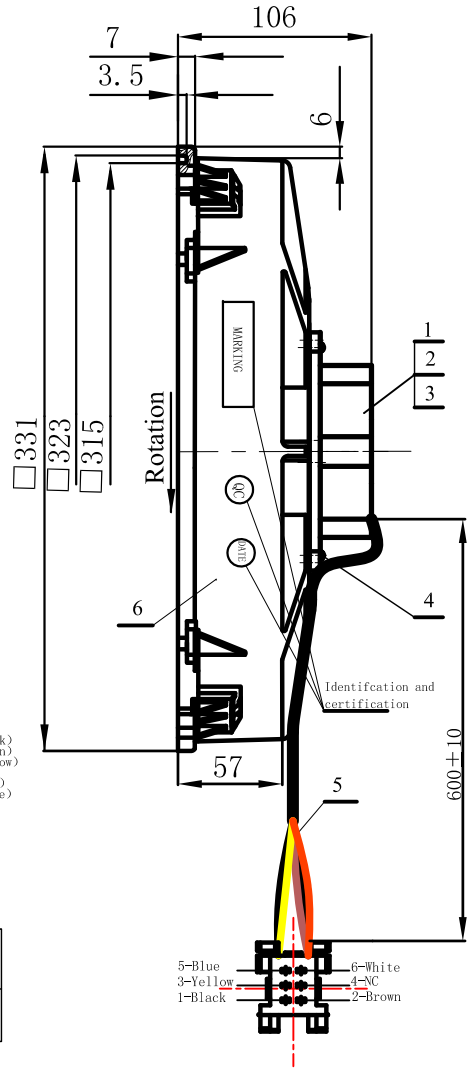

1（Black）: Supply（+12V DC）;	2(Brown): GND;
3（Yellow）: PWM/LIN（0-12V DC）;	4(Orange): No connection;
5（Blue）: Low（No connection or +12V DC）;6（White）: Diagnostic output;	

Explanation:
1（Black）,2(Brown): 14#(2.5mm²)
3（Yellow）, 5（Blue）, 6（White）: 18#(1.0mm²)

NO.	P/N	Name of Material	Quantity	Specification	Material	Weight(KG)
7	13050000001	Inlet Ring Couple	4		PA66+GF30	
6	13030000003	Φ305 Nine Leaves hair leaves	1		PA66+GF30	
5	13020000001	Φ305 nets	1	2782	PA66+GF30	
4	14080000008	Small flat self-tapping screws	4	M4×30		
3	13010000017	Condensation motor	1	102ZWS005C		
2	12000000039	Condensation controller	1	AX12BLMC009C-B305-VSP-03		
1	13040000003	After the cover	1			

Mark	Subarea	Change NO.	Sign	Date
Design		Standardize		
Check				
Process		Authorize		

AX12BL009C-B305-VSP-03
BLDC Axial Blowers

Tonada
Chongqing Tonada Technology Co.,Ltd

P/N	Weight (KG)	Proportion
01.12.06	3.0	1:1

Total 1 Page NO.1 Page